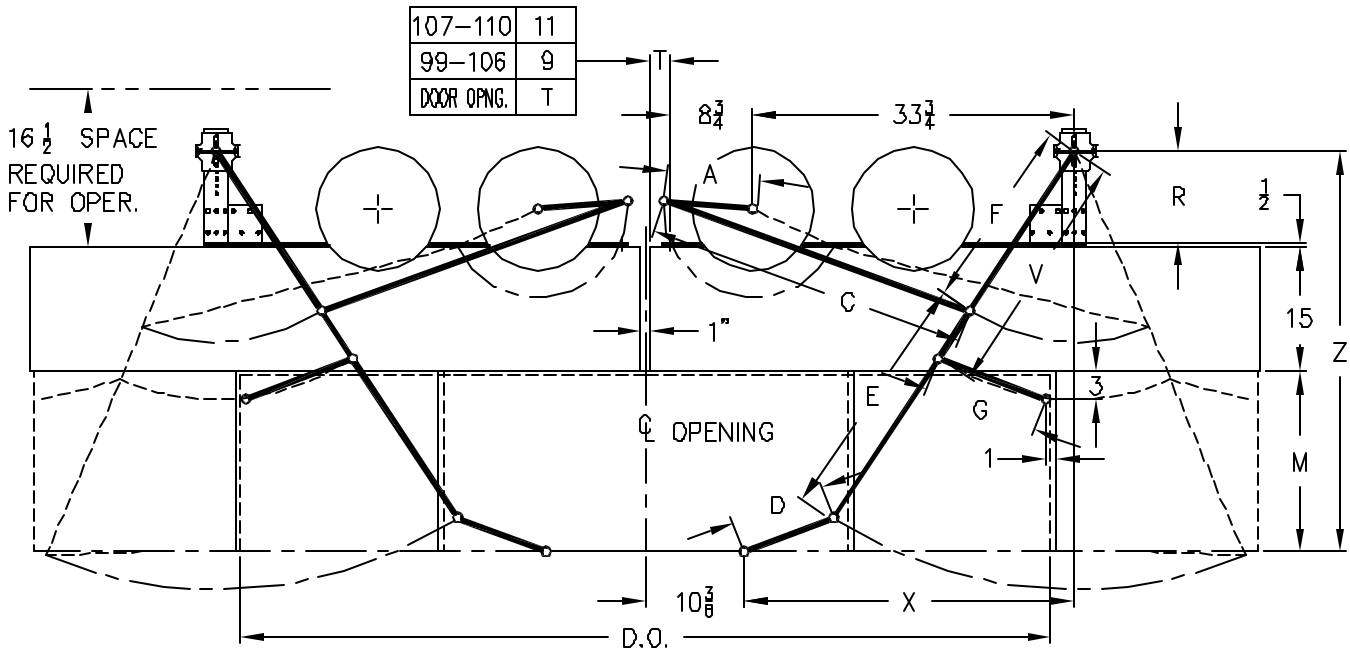

DOOR OPENING	A	C	D	E	F	V	G	M	X	Z	R
	OPERATOR ARMS		DOOR ARMS					CLUTCH	PIVOT		OPER
110	10 15/16	35	12	35	23	28 3/8	17	27	43 5/8	52 1/4	9 3/4
109	10 7/8	34 7/8	12	35	23	28 3/8	16 1/2	27	43 5/8	52 1/4	9 3/4
108	10 3/4	34 13/16	12	35	23	28 5/16	16	27	43 5/8	52 1/4	9 3/4
107	10 11/16	34 11/16	12	35	23	28 1/4	15 1/2	27	43 5/8	52 1/4	9 3/4
106	10 15/16	34 13/16	12	32	22	26 3/16	16 13/16	23	41 5/8	48 3/4	10 1/4
105	10 7/8	34 3/4	12	32	22	26 1/16	16 5/16	23	41 5/8	48 3/4	10 1/4
104	10 3/4	34 5/8	12	32	22	26	15 7/8	23	41 5/8	48 3/4	10 1/4
103	10 11/16	34 9/16	12	32	22	25 7/8	15 7/16	23	41 5/8	48 3/4	10 1/4
102	10 9/16	34 7/16	12	32	22	25 13/16	15	23	41 5/8	48 3/4	10 1/4
101	10 1/2	34 3/8	12	32	22	25 11/16	14 9/16	23	41 5/8	48 3/4	10 1/4
100	10 3/8	34 1/4	12	32	22	25 9/16	14 1/8	23	41 5/8	48 3/4	10 1/4
99	10 5/16	34 3/16	12	32	22	25 1/2	13 11/16	23	41 5/8	48 3/4	10 1/4

GAI ELEVATOR DEVICES

TWO SPEED CENTER OPENING 99–110 D.O. OPERATOR DATA TABLE

MAY 23 2002

DATA25–3